My Experiments With Practical Science

Igniting Young Minds with Innovation & Creativity

DR BACHASPATI DASH

"Impossible is not a fact or truth — it is just a negative opinion about what you cannot do at present. Let us prove this wrong and make it a myth, as hundreds of scientists, inventors, and innovators have done before us. Example: heavier-than-air objects cannot fly — proved wrong by the Wright brothers."



BlueRose ONE .com
Stories Matter
NewDelhi • London

BLUEROSE PUBLISHERS
India | U.K.

Copyright © Dr Bachaspati Dash 2026

All rights reserved by author. No part of this publication may be reproduced, stored in a retrieval system or transmitted in any form or by any means, electronic, mechanical, photocopying, recording or otherwise, without the prior permission of the author. Although every precaution has been taken to verify the accuracy of the information contained herein, the publisher assumes no responsibility for any errors or omissions. No liability is assumed for damages that may result from the use of information contained within.

BlueRose Publishers takes no responsibility for any damages, losses, or liabilities that may arise from the use or misuse of the information, products, or services provided in this publication.



For permissions requests or inquiries regarding this publication, please contact:

BLUEROSE PUBLISHERS
www.BlueRoseONE.com
info@bluerosepublishers.com
+91 8882 898 898
+4407342408967

ISBN: 978-93-7542-568-7

Cover design: Aafiya Saifi
Typesetting: Namrata Saini

First Edition: November 2026

Disclaimer

Reading this book can make you very powerful — because 'knowledge is power' only when it is applied, and this book is all about that: getting hands-on, experimenting, innovating, learning through your own senses, and watching science happen right before your eyes.

Science and technology carry tremendous power, potential, and the possibility of misuse. The author does not take responsibility for any misuse. Readers, parents, and guardians are advised to use their own judgment and act within the law.

After reading this book, you or your child may become highly motivated to learn science — not by rote memory, but by doing. He or she is likely to secure higher marks in exams with ease, excel in entrance tests such as NEET and JEE, develop a deep passion for science, reduce screen time, and perhaps invent or innovate something truly new, making the family, friends, and nation proud.

THE LEARNING CONE (EDGAR DALE 1969)

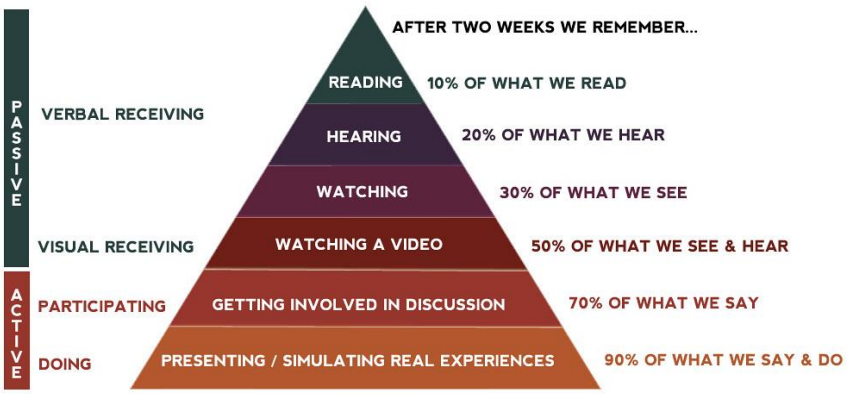

Dedication



To My Father — Dr. Sudarshan Dash

Who always inspired me, provided me with the freedom to conduct all my experiments, helped me obtain chemicals, and shared equally in my joy every time I succeeded. He was a truly unique, self-made person with a deep understanding of Indian philosophy and Ayurveda. He insisted that Indians once dominated in science, mathematics, astrology, metallurgy, and aviation — and that much more still needs to be researched in the Vedas.

I am unfortunate to have lost him in 2013 and am yet to find anyone to match him — a rare personality with a pure heart, extraordinary diligence, and blessings for all. He was a real Karm Yogi.

I am also deeply grateful to my mother, Mrs. Sarojini Devi, for her loving support throughout all my ventures.

I am thankful to my elder daughter, Dr. Subhashree, for her editing and diagrams. She is living proof of my practical approach: she scored 95% in the +2 Science board exam (2009), placing among the top ten in Odisha, cleared all medical and engineering entrance exams without any coaching, and completed her MBBS and MD in Radiology from top institutes in Odisha.

My sincere thanks also to my younger daughter Sunitee and son Sarthak, whose belief in the practical approach helped them secure positions at Xavier University and IIT Madras, respectively.

To my spouse, Paurnamasi — thank you for your unconditional love, support, and patience through all my sometimes-unconventional adventures in life.

I am grateful to Hyderabad for what it offered fifty years ago — the magnificent Osmania State Library, the Pathagar library, and the Agarwal High School with its excellent teachers and laboratory. Equally, to BJB College, Bhubaneswar, where I conducted most of my experiments, and to the OUAT library — the finest in Odisha at that time.

My deepest respect to all scientists, discoverers, inventors, and innovators throughout history, whose sacrifices and dedication we all benefit from today. Countries that recognised this early — the USA, Japan, and now China — developed fastest. It is time for India to prioritise science and technology. Israel has demonstrated that a nation surrounded by adversity can lead the world through the power of innovation.

Preface

Science is a practical discipline. No institution can teach it purely through theory — there is no correspondence course in science. Yet, unfortunately, many schools and colleges in India do exactly that. A subject that is inherently exciting and amazing has been reduced to a gruelling exercise in memorisation, aimed only at scoring marks in final exams and entrance tests.

Albert Einstein's famous observation — "Imagination is more important than knowledge" — is truly practical advice. Students need time for self-study and imagination; they should not spend all their hours in classrooms or coaching centres. There are tests for knowledge or information today, but ideally, there should be tests for imagination and innovation too — as Israel, Japan, and the USA have shown.

The famous learning pyramid puts it simply: "I hear — I remember 25%; I see — I remember 50%; I do — I remember 100%." Doing it yourself is maximally productive, just as it is in teaching complex medical procedures.

This book is my humble attempt to rekindle interest in science as an exciting, rewarding, and deeply meaningful subject. It will be of great value to students in +2 Science preparing for NEET, JEE, and Olympiads — and equally inspiring to curious minds of all ages.

These are experiments I conducted more than forty years ago, as a high-school student and early college learner. I still remember them vividly because I performed them myself, with deep interest and the full support of my father. They helped me succeed in every entrance exam I attempted, without any coaching or guidebook.

If I could conduct such experiments in a small town like Bhubaneswar in the 1970s with limited resources, they are certainly possible anywhere today — with modern technology, the internet, YouTube, and online availability of materials.

"Research and innovation for all" — this is not the birthright of scientists in sophisticated laboratories. It belongs to every curious mind.

Life itself is a sum total of chemical reactions and the practical application of physics, chemistry, and biology.

Most inventions and discoveries were made in laboratories through experiments. The transistor was invented at Bell Laboratories, USA; penicillin was discovered in Alexander Fleming's laboratory in London. If you want that innovative mindset — if you want to think like Edison, Tesla, or Elon Musk — you must go for practicals and create your own laboratory. It is neither too difficult, too costly, nor impractical.

— Dr. Bachaspati Dash

A Note for Parents and Teachers

Out-of-the-box thinking and reading beyond the syllabus are what make our children truly exceptional — and lead the country.

You may want your child to be like Newton, Tesla, Edison, or Elon Musk. This book is a humble step toward that goal. Our current education system does not strongly favour innovation, invention, and discovery — but you can change that. By allowing children to experiment and explore, by giving them the freedom to be curious, you may be nurturing the next great scientist.

By forcing students to memorise the syllabus and attend endless coaching, we may be quietly extinguishing inherent talent. A child who could have become a Ramanujan, a C.V. Raman, or an Einstein is waiting for permission to explore. Please allow students to play with science — learning can be genuinely fun, and exam success often follows naturally.

Important Safety Warning

Please conduct all experiments under the supervision of a senior teacher or parent. Exercise great care when using chemicals, concentrated acids, and any flammable substances. Always understand the chemicals and reactions involved before proceeding — this makes experiments both safe and unforgettable.

How Lucky You Are!

If you were born after the year 2000, you are extraordinarily fortunate. Everything our generation — born around the 1960s — longed for, struggled to access, and could only dream about is now at your fingertips. In our time, there were no mobile phones, no computers, no YouTube, no Google. Colour television was a luxury; even a basic telephone line was a privilege. Those were the days of steam engines, fountain pens, and handwritten letters.

Now, in 2026, as the first quarter of this century draws to a close, you are the most empowered generation in human history. This book is like a time machine — it will take you to the roots of all present and future technology. The fundamental laws of science will not change: Newton's laws are 300 years old; Einstein's insights are 100 years old; basic chemistry is older still. But once you understand these foundations and apply them through your own experiments, you will be in the driver's seat for emerging technologies — not merely a spectator.

"No great discovery was ever made without a bold guess."
— Sir Isaac Newton

Contents

CHAPTER 1: The Importance of Practical Science 1
CHAPTER 2: Electricity: Cells and Batteries 2
CHAPTER 3: My Collection of Chemicals & The Power of Dreams 5
CHAPTER 4: Acids: Properties, Cautions, and Cheap Nitric Acid 8
CHAPTER 5: Potassium Nitrate, Gunpowder and Explosive Chemistry.....10
CHAPTER 6: Making Red Lead — My Own Invention.....12
CHAPTER 7: Golden Precipitate — Gold Out of Water 13
CHAPTER 8: Smoke Without Fire 14
CHAPTER 9: Fire Without a Matchbox 15
CHAPTER 10: Flames in Chemistry.....16
CHAPTER 11: Fun with Calcium Carbide 18
CHAPTER 12: Find Out What Salt: Salt Analysis.....19
CHAPTER 13: Wood Distillation and The Sawdust Stove.....20
CHAPTER 14: Molten Metals.....21
CHAPTER 15: Colourful Crystals and The Chemical Garden 23
CHAPTER 16: The Lead-Acid Battery and The Battery Heater.....24
CHAPTER 17: Chemical Effects of Electricity 26
CHAPTER 18: Magnetic Effects of Electricity.....27
CHAPTER 19: The Wonderful World of Electronics and the Battery Eliminator 28
CHAPTER 20: A Radio Without Batteries 29
CHAPTER 21: A Simple Radio Transmitter — Your Own Radio Station 30
CHAPTER 22: Rewinding the Ignition Coil of a Scooter.....32

CHAPTER 23: Lighting a 12-Volt Bulb with 220 Volts — and Reviving a Fused Bulb 33
CHAPTER 24: Getting Electricity When the Power Fails 34
CHAPTER 25: Repairing a TV at Zero Cost..... 35
CHAPTER 26: Tube Light Without a Choke — My Innovation 36
CHAPTER 27: The Colourful World of Indicators 37
CHAPTER 28: Power from the Sun 38
CHAPTER 29: My First Amazement by Solar Energy — Doctor Challenges Engineer 39
CHAPTER 30: Free Light and Electricity — Saving Money with Solar Energy 40
CHAPTER 31: Making My Own Lead-Acid Battery and Inverter (1992) 41
CHAPTER 32: Biogas — Power from Waste, Your Own Gas Station. 42
CHAPTER 33: Gases in Chemistry 43
CHAPTER 34: Magnesium from Sea Water 45
CHAPTER 35: My Wonder Room at SCB Medical College, 1983 46
CHAPTER 36: Chloroform, Fermentation, and Electronics Projects ... 47
CHAPTER 37: Disappearing Frog and Flesh-Eating Chemicals 48
CHAPTER 38: The Beginning of the Digital Age — My First Computer, 1999 49
CHAPTER 39: Using a Mobile Phone Before Mobile Service Was Available 50
CHAPTER 40: Saving Energy, Water, and Effort with Smart Switches 51

Types of experiments: -

- What you gain and learn by this experiment, concepts and theory – all experiments
- That entertained me most- chapter-2, 3, 5,8,9,20, 21,
- That increased my knowledge and helped in entrance exam- chapters- all chapters
- That made me powerful- chapters 2, 3, 10, 21
- That amazed me—almost all -
- That saved my time and money-chapters 18,19, 22,24,30, 31, 32
- Those helped me to understand difficult concepts in science- almost all chapters
- Those are my inventions/ innovations- chapters-2,5,6,22,26,31
- All can increase interest in science and makes you to learn more on your own
- Experiments that can be your project for science exhibitions
- Experiments for research and innovations, and relevant in present context, like batteries.

CHAPTER 1

The Importance of Practical Science

My Wow Moment

I was reading quietly in my favourite library at OUAT (Odisha University of Agriculture and Technology) when a friend rushed in to congratulate me. I had secured a high rank in the medical entrance exam — on my very first attempt, without any entrance guidebook or tuition. I was genuinely surprised. In those days, getting into a medical college was among the toughest competitive challenges in Odisha.

When I reflected on how this had been possible, the answer was clear: it was the experiments I had conducted. Many exam questions had come directly or indirectly from practical work. Hands-on science had done what no coaching could.

Practical science is fascinating, thrilling, and profoundly useful for understanding concepts. Its greatest advantage is simple: once you do something yourself, you remember it forever. Most innovations, inventions, and discoveries have been made in laboratories through experiments. Practical work inculcates scientific curiosity and attitude from an early age — and that is where its power truly lies.

Learning science without practicals is like learning to swim without going into the water.

CHAPTER 2

Electricity: Cells and Batteries

Electricity is the most useful form of energy, and producing a continuous flow of it is the foundation of all electrical study. Scientists have tried thousands of types of cells and batteries over centuries — but only a few are truly legendary and worth understanding in depth.

The Voltaic (Galvanic) Cell

This is the simplest cell: two different metals — typically a zinc rod and a carbon rod — immersed in dilute sulphuric acid. It produces electricity for a short time, but the problem of polarisation (hydrogen gas depositing on the electrodes) limits its use. To produce a continuous flow, we need a depolarising agent — which led to the development of improved cells like the Daniel cell and the Leclanché cell.

The Voltaic Pile

The oldest method to achieve higher voltage, the Voltaic Pile consists of alternating layers of zinc and copper plates, separated by cloth soaked in saline water, stacked in series. Each cell produces approximately 1.1 volts. It gives current for a short time but is simple and highly instructive.

The Lemon or Potato Cell

By inserting two dissimilar metal rods (such as copper and zinc) into a lemon or potato, a small current can be produced for a short time. This is a wonderful introductory experiment—easy, safe, and always impressive.

The Dichromate Cell — My Practically Successful Battery

This is the most interesting and practical cell for supplying a continuous current of 2 volts — and it can easily be made at home or in a school lab.

What You Need

- Dilute sulphuric acid (battery grade) — 100 ml
- Potassium dichromate ($K_2Cr_2O_7$) — 10–20 g
- One beaker or wide-mouthed bottle
- Two carbon rods from used D-size dry cells
- One zinc sheet or rod (from a used dry cell)

Method

Mix the acid with the dichromate in the beaker to form a beautiful bright-orange solution. If using concentrated sulphuric acid, always add acid to water — never the reverse — slowly, while cooling, as significant heat is generated.

Connect wires: two carbon rods to the positive (red) terminal and zinc to the negative (black). Immerse approximately three-quarters of the rods into the solution. You now have a steady 2-volt supply — enough to light an LED or small bulb. Connect multiple cells in series to obtain higher voltages.

As the cell operates, the bright orange solution turns pink, then brown, and finally green — due to the formation of chromium sulphate. The cell continues working until any one of the three reactants (acid, dichromate, or zinc) is fully consumed.

Chemical Reactions

$$Zn + H_2SO_4 \rightarrow ZnSO_4 + H_2$$

$$H_2 + K_2Cr_2O_7 + 2H_2SO_4 \rightarrow K_2SO_4 + CrSO_4 + 2H_2O$$

The dichromate acts as a depolarising agent, preventing hydrogen gas from accumulating on the electrode. Every successful battery requires such a depolarising agent — MnO_2 in a dry cell, for example.

My Own Innovation: The Dry Daniel Cell

Items needed: zinc plates, copper plates, copper sulphate crystals (powdered), cloth soaked in saline.

Clean the plates and connect them with wire — copper as positive, zinc as negative. Sprinkle powdered copper sulphate on the copper plate, lay the saline-soaked cloth over it, then place the zinc plate on top. This makes one cell. Stack similar cells in series to add voltage. Five cells will produce approximately 6 volts.

Chemical Reaction

$Zn + SO_4^{2-}$ (from $CuSO_4$) $\rightarrow ZnSO_4 + 2e^-$

Cu^{2+} (from $CuSO_4$) $+ 2e^- \rightarrow Cu$ (deposited on copper plate)

The saline-soaked cloth acts simply as an ion-transport medium. This is an almost-dry battery — practical, stable, and instructive.

CHAPTER 3

My Collection of Chemicals & The Power of Dreams

Collecting chemicals for a home laboratory need not be expensive. With a little enquiry, most required chemicals can be found cheaply at everyday shops. This also beautifully illustrates how chemistry is woven into daily life.

Where to Find Chemicals

From a Goldsmith

- Concentrated sulphuric acid and nitric acid

From a Hardware Store

- Hydrochloric acid (used for cleaning floors)
- Caustic soda / sodium hydroxide (drain cleaner)
- Calcium oxide — dry lime (for whitewashing)
- Calcium carbide (for welding and fruit ripening)

From a Grocery Store

- Common salt (sodium chloride)
- Sodium bicarbonate (baking soda)
- Sodium carbonate (washing soda)
- Vinegar (dilute acetic acid)

From a Fertiliser Store

- Potassium chloride
- Ammonium nitrate (calcium ammonium nitrate / CAN)
- Calcium hydrogen phosphate

From an Ayurvedic Raw Materials Shop

These shops are a treasure trove — and a reminder that chemistry was deeply understood in ancient India:

- Potassium nitrate (Jabaksyara)
- Copper sulphate (Mayuragiria or Tutia)
- Ammonium chloride (Nisadala)
- Mercury (Parada)
- Sulphur (Gandhak)
- Alum — potassium aluminium sulphate
- Borax

From a Medicine Shop

- Potassium permanganate
- Magnesium sulphate (Epsom salt)
- Glycerine
- Boric acid

From a Ceramic Glazing Factory

- Cobalt oxide (produces brilliant blue colour on ceramic ware)
- Rectified spirit (95% ethyl alcohol)

The Power of Dreams and the Subconscious Mind

Once you develop a deep interest and passion for something, and you think about it before going to sleep, your subconscious mind continues working on it. Science and psychology both acknowledge that the subconscious mind can solve problems that the conscious mind cannot.

I experienced this firsthand. Once, when I had run out of sulphuric acid and could not find it anywhere, I went to sleep thinking about the problem. That night I dreamed that the acid was available near Khandagiri Square in Bhubaneswar — a place that in 1978 was virtually empty. Doubting but curious, I went. I found a petrol pump. On a hunch I entered — and found bottles of sulphuric acid used for lead-acid vehicle batteries. My dream had guided me.

Similarly, when I ran short of potassium dichromate, I dreamed it was available at Chandni Chowk in Cuttack — a city I had never visited. I made the journey. The chemical was there.

Think deeply about what you have studied before going to sleep. Your subconscious mind will not only strengthen memory — it may give you new insights and ideas.



CHAPTER 4

Acids: Properties, Cautions, and Cheap Nitric Acid

Concentrated sulphuric acid is one of the most important chemicals in a laboratory. It is a heavy, viscous, colourless liquid with a specific gravity of approximately 1.84 — nearly twice the density of water. It is highly corrosive and reacts with most organic materials.

As a young student, I once accidentally broke a bottle of it. I discovered quickly: cloth placed on it melted; water caused dangerous steaming and spattering; I could not touch it. The only solution was to pour sand and soil over it and remove it with plastic scrapers. Always handle concentrated acids with the greatest care.

Safety Rule: ALWAYS add acid to water — never water to acid. Sulphuric acid releases a large amount of heat when mixed with water; adding water to acid can cause violent spattering.

Nitric acid reacts with the proteins in skin to produce a yellow stain — xanthoproteic acid. My hands were often yellow while working with it, though it is less dangerous than concentrated sulphuric acid. Its fumes are pungent and harmful to the lungs; always work in a well-ventilated space.

Preparing Cheap Nitric Acid

Nitric acid can be readily and inexpensively prepared in a school laboratory using potassium nitrate or ammonium nitrate (obtained by filtering calcium ammonium nitrate fertiliser, which is a mixture of ammonium nitrate and insoluble calcium carbonate).

Understanding the Chemistry

Molecular weight of H_2SO_4 = 2 + 32 + 64 = 98. Commercial concentrated H_2SO_4 is 95–98%; divide by specific gravity (1.84) to get volume:

100 g ÷ 1.84 = ~55 ml of concentrated sulphuric acid

$$H_2SO_4 + 2\ NH_4NO_3 \rightarrow 2\ HNO_3 + (NH_4)_2SO_4$$

Molecular weight of NH_4NO_3 = 14 + 4 + 14 + 48 = 80; double this for the reaction = 160 g.

Method

Place 160 g of ammonium nitrate and 55 ml of concentrated sulphuric acid in a retort, fix it in a stand, and heat carefully using a Bunsen burner or spirit lamp. Collect the brownish nitric acid vapours in a flask cooled in ice water. You will see beautiful brown vapours condensing into brownish liquid nitric acid.

Cobalt Nitrate

Cobalt nitrate forms a beautiful pink solution in water and is a very useful reagent. I prepared it by dissolving cobalt oxide (a heavy, black amorphous solid, obtained from a nearby Khadi and Village Industry pottery unit) in concentrated nitric acid. This method of preparation was not available in any textbook at the time — making it a genuine experiment and, when successful, a **discovery or invention.**

CHAPTER 5

Potassium Nitrate, Gunpowder and Explosive Chemistry

Potassium nitrate has been an important chemical since ancient times — used in Ayurvedic medicine and as the principal component of gunpowder. It has the significant advantage of being naturally occurring, non-hygroscopic, and stable.

Making Cheap Potassium Nitrate

I needed potassium nitrate in quantity and searched for a cheap method. Two fertilisers are readily available: calcium ammonium nitrate (CAN) and potassium chloride. When dissolved together in solution, potassium — being more electropositive — displaces ammonium to combine with nitrate, forming potassium nitrate. As the solubility of potassium nitrate decreases on cooling, beautiful needle-shaped crystals form when the saturated solution is cooled in ice. This double displacement method was **my own innovation** — not available in any textbook at the time.

Gunpowder

Composition: Potassium nitrate 75% + Charcoal 15% + Sulphur 10%

The charcoal should ideally be from Calotropis gigantea (Arakha/Arka), a plant found throughout India, used in Ayurveda, and whose flowers are offered to Lord Shiva. I heated the dried plant in an earthen pot to obtain its charcoal.

Safety Warning: Gunpowder experiments must be conducted ONLY under adult supervision, outdoors, with full knowledge of the chemistry involved. Even 1 gram of gunpowder can generate a significant force. Never attempt these indoors.

What Is Explosive Chemistry?

Any rapidly occurring, exothermic chemical reaction can be explosive. Oxygen is the key limiting factor — which is why all explosives contain an oxidising agent (potassium nitrate, potassium chlorate, ammonium nitrate, etc.). The explosive power is directly proportional to the amount of gas produced and the heat of the exothermic reaction.

Colourful Flames and Fireworks

When gunpowder is mixed with various metal salts, it produces different coloured flames:

- Iron → orange sparks
- Barium → green
- Sodium → golden yellow
- Strontium → crimson red
- Potassium → violet
- Copper salts → blue
- Magnesium → dazzling white

CHAPTER 6

Making Red Lead — My Own Invention

Red lead (Pb_3O_4) is an ancient substance used as a pigment, colouring agent, in enamel for pottery, and traditionally as Sindhoor. Better and safer substitutes exist today, as lead is toxic.

I was challenged by someone who needed red lead for cheap pottery enamel and could not obtain it. I had only metallic lead and could find no published method for making red lead from it. I had to innovate.

I melted lead (melting point: 327°C). A thin layer of white lead oxide formed as the molten metal contacted air. I reasoned that an oxidising agent that leaves no residue would be ideal — and chose ammonium nitrate, which on decomposition produces only nitrogen and water vapour. I sprinkled ammonium nitrate powder onto the molten lead. The white oxide turned brilliant red. It worked.

CHAPTER 7

Golden Precipitate — Gold Out of Water

This is among the most visually spectacular reactions in chemistry — perfect for a science exhibition.

Two chemicals are needed: lead nitrate and potassium iodide. Both dissolve in water to form clear, colourless solutions. When they are slowly mixed, a brilliant golden-yellow precipitate of lead iodide forms and slowly descends like golden rain — especially beautiful when the lead nitrate solution is concentrated and the mixture is cool.

$$2KI + Pb(NO_3)_2 \rightarrow PbI_2\downarrow \text{ (golden yellow)} + 2KNO_3$$

Lead iodide is insoluble in water; potassium nitrate is highly soluble. This is a perfect example of a double displacement reaction — and one of the most elegant demonstrations in introductory chemistry.

CHAPTER 8

Smoke Without Fire

The ancient saying — 'where there is smoke, there is fire' — appears even in the Vedas as an example of logical deduction. Science can prove it wrong.

Mix any ammonium salt (I used cheap ammonium nitrate) with calcium oxide (quicklime). The reaction produces ammonia gas, which has a characteristic pungent smell all science students should learn to recognise. Bring a glass rod dipped in concentrated hydrochloric acid close to the ammonia — dense white fumes of ammonium chloride form immediately.

$NH_3 + HCl \rightarrow NH_4Cl$ (solid white fumes)

No fire. Only smoke. A simple, safe, and fascinating experiment anyone can try at home.

CHAPTER 9

Fire Without a Matchbox

Fire has played a crucial role in human civilisation. This experiment shows how fire can be produced using chemistry alone — useful to know when matches are unavailable or wet.

You need: concentrated sulphuric acid, potassium permanganate, and any flammable substance (paper, glycerine, or kerosene).

Concentrated sulphuric acid is a powerful dehydrating agent; potassium permanganate is a powerful oxidising agent. Slowly mix the two on a small pile of the flammable material, stirring with a glass rod. The material ignites.

Safety: Wear eye protection and gloves. The mixture can sometimes react violently. Keep a sand bucket nearby.

CHAPTER 10

Flames in Chemistry

The first chapter of practical chemistry in +2 Science typically begins with the Bunsen burner and flame tests. Understanding why different metal salts produce different flame colours is both beautiful and practically important — these questions appear frequently in medical and engineering entrance examinations.

The common yellow colour of a candle or kerosene flame comes from unburned carbon particles. When metal salts are introduced to a flame, each element emits a characteristic colour:

Metal Salt	Colour of Flame
Sodium	Golden Yellow
Potassium	Violet / Purple
Calcium	Brick Red
Magnesium / Aluminium	Silvery White
Copper	Green
Strontium	Crimson Red
Iron	Orange-Brown
Barium	Apple Green
Lithium	Carmine Red

I recall that strontium salts — producing a vivid crimson red — were not demonstrated in our college laboratory. But because I had tested them at home, I correctly answered a multiple-choice question on this in the medical entrance exam, when most other students got it wrong.

Practical experience is irreplaceable — the exam will test what textbooks describe, but your memory will be based on what you have seen and done yourself.





CHAPTER 11

Fun with Calcium Carbide

Calcium carbide is a rock-like white solid made by fusing coal with calcium oxide in an arc furnace. It has been in use for over 100 years — for gas welding, fruit ripening, and as a fascinating source of acetylene gas.

$$CaC_2 + 2H_2O \rightarrow Ca(OH)_2 + C_2H_2 \text{ (acetylene)}$$

Acetylene is a two-carbon hydrocarbon with a triple bond. It forms an explosive mixture with air and burns with a yellow, sooty flame.

Simple Experiments with Calcium Carbide

Place a few pieces of calcium carbide in water and observe the gas bubbles. Ignite the escaping gas — it burns on the surface of the water. Fire on water — always a crowd-pleaser.

Acetylene Explosion Demonstration

Place some carbide on a small plate with water. Cover with a tin that has a small hole near the base. Let acetylene mix with air inside the tin for a moment, then bring a lit matchstick to the hole. The tin will be blown upward. This vividly illustrates how a piston in an internal combustion engine receives its power.

Safety: Perform this experiment outdoors, with the tin pointing away from all people. Use only a small amount of carbide.

CHAPTER 12

Find Out What Salt: Salt Analysis

Salt analysis is like detective work in chemistry. Given an unknown salt, you must identify its composition through a logical series of tests. Students often find it intimidating — but it is actually beautifully systematic and deeply interesting.

Key observations to remember:

- All crystalline salts are soluble in water (organic or inorganic).
- Coloured salts almost always belong to transition elements: copper (blue/green), iron (green/brown), cobalt (pink), chromium (orange/green).
- Amorphous salts may be carbonates, bicarbonates, oxides, or sulphides.
- Dilute acid + carbonate → CO_2 (effervescence); + sulphide → H_2S (rotten-egg smell).
- Concentrated H_2SO_4 + chloride → HCl (pungent fumes); + nitrate → brown NO_2 fumes on heating.

The flame test (described in Chapter 10) and the charcoal cavity test (heating the salt in a small cavity in charcoal) are the most direct methods for identifying the metallic component. Salt analysis forms the foundation for more advanced techniques: soil analysis, blood chemistry, mineral analysis, and industrial quality control.

CHAPTER 13

Wood Distillation and The Sawdust Stove

Wood has been humanity's primary source of energy and light since the beginning of civilisation. Understanding its chemistry is both important and fascinating.

The flame you see when wood burns is mainly produced by wood gas — the oldest studied gas in history, followed by coal gas. Fine particles of wood release gas first; that is why we must heat wood sufficiently before it catches fire. Heating wood in the absence of oxygen (pyrolysis) releases all gases, including methane, hydrogen, tar-rich vapours, and carbon oxides.

You can easily distil wood dust in a test tube and observe its properties — a simple, instructive experiment.

The Sawdust Stove

I used a sawdust stove for all my experiments and for melting metals. It has a central vertical hole lined with sawdust; as air is drawn upward by hot flame,through this channel, it mixes with wood gas to produce complete combustion — a very high temperature, often producing a blue flame with minimal smoke.

The gasification of biomass (producing wood gas from bio-waste) is today a serious area of sustainable energy research. The by-products include benzene, methyl alcohol, tar, and charcoal. Wood gas can power internal combustion engines — it was even used during the Second World War when petroleum was scarce.

CHAPTER 14
Molten Metals

At room temperature, mercury is the only metal that exists as a liquid. It is the densest common liquid — 13.6 times heavier than water. A simple demonstration: place nails, pins, and coins in a cup of mercury. Nothing sinks. Even iron, with a specific gravity of 7.8, floats — proving Archimedes' principle beautifully.

All molten metals share remarkable properties: they are brilliantly shiny, they do not spread but form globules when dropped, and they have very high surface tension. Most are silvery-white when molten; gold is yellow, copper is pinkish-red.

Melting Points — A Fascinating Progression

Metals with lower melting points were discovered first in human history — because they could be extracted from ore by wood fires:

- Tin: 232°C — melts in a hot kitchen oven
- Lead: 328°C
- Zinc: 420°C
- Aluminium: 660°C
- Silver: 962°C
- Gold: 1,064°C
- Copper: 1,085°C
- Iron: 1,538°C
- Platinum: 1,768°C
- Tungsten: 3,422°C — the highest of all metals

The progression from the Bronze Age to the Iron Age directly follows this sequence. Iron, once accessible, changed the history of warfare and the Industrial Revolution. The iron pillar of Delhi — over 1,600 years old and still rust-free — is a testament to ancient Indian metallurgical knowledge.

Molten metals can easily be poured into moulds — I made zinc rods and lead grids for batteries this way. Tin melts at just 232°C; even a camping stove will do it.



CHAPTER 15

Colourful Crystals and The Chemical Garden

Crystals are among the most beautiful natural structures. The colour of a crystal immediately hints at its composition: blue → copper; green → iron or nickel; pink → manganese; purple or dark green → chromium (chroma = colour).

The Chemical Garden

Sodium silicate (water glass) is soluble in water, forming a thick solution. When coloured metal salt crystals are dropped into a concentrated sodium silicate solution in a glass jar, the crystals slowly grow upward in tree-like patterns of brilliant colour — a chemical garden.

As each crystal dissolves slightly at the surface, the metal ions react with silicate to form an insoluble silicate membrane. Osmotic pressure builds inside this membrane, extending it upward like a growing plant. The effect is spectacular and requires no special skills — just patience and the right crystals.

Try using crystals of copper sulphate (blue), iron sulphate (green), cobalt chloride (pink), and manganese sulphate (pale pink) for a multicoloured display.

CHAPTER 16

The Lead-Acid Battery and The Battery Heater

Rechargeable batteries are more important today than ever before — powering mobile phones, electric vehicles, and renewable energy storage. The lead-acid battery, invented by Gaston Planté in 1859, is over 160 years old and still in widespread use.

How a Lead-Acid Battery Works

The reversible electrochemical reactions:

Charging (anode): $Pb + 2H_2O \rightarrow PbO_2 + 4H^+ + 2e^-$
Discharging: $PbO_2 + H_2SO_4 + 2H^+ + 2e^- \rightarrow PbSO_4 + 2H_2O$
Charging (cathode): $PbSO_4 + 2H^+ + 2e^- \rightarrow Pb + H_2SO_4$

Advantages

- Inexpensive and easy to manufacture
- High voltage — 2 V per cell
- Very low internal resistance
- Can deliver very high current (ideal for starting motors)
- Stable and fire-safe
- Highly recyclable

Disadvantages

- Heavy — due to the high atomic mass of lead
- Short life (3–5 years) due to sulphation of plates
- High self-discharge rate; deteriorates quickly if left discharged

My Battery Heater Experiment

Using a small 2-wheeler lead-acid battery (with a transparent case, so the plates were visible), I took only 1/20th of a nichrome heater coil (calculated to match the 12-volt supply, rather than the original 220-volt design). When connected directly to the battery terminals, the coil glowed fully — sufficient to heat objects or ignite paper.

This is not possible with most batteries, because only a lead-acid battery's very low internal resistance can deliver the high current required. This experiment vividly demonstrates internal resistance, current, power, and the relationship between them.

That means it can power the power-hungry motors and similar appliances, opening the door to electric vehicles as internal combustion engines can only be efficient up to 40%, whereas electric motors are >95% efficient.

The Lithium-ion batteries have also very low internal resistance, with high energy density, ideal candidate for EV.

A lead-acid battery charged by a solar panel is the ideal, cost-effective power source for all your home-laboratory experiments.

CHAPTER 17

Chemical Effects of Electricity

Electrochemistry shows us that the relationship between electricity and chemistry runs both ways: chemical reactions produce electricity (cells), and electricity can drive chemical reactions (electrolysis).

Electrolysis of Water

Take two carbon rods from old dry cells as electrodes. Place them in water to which a small amount of any acid, alkali, or salt has been added to improve conductivity. Connect to a 3–9 V source. Hydrogen bubbles appear at the negative electrode (cathode); oxygen at the positive (anode) — in a 2:1 ratio.

$$2H_2O \rightarrow 2H_2 \text{ (cathode)} + O_2 \text{ (anode)}$$

Collect the gases in inverted water-filled test tubes and test them: hydrogen burns with a 'pop'; oxygen relights a glowing splint. This process is now central to green hydrogen production from solar energy.

Copper Electroplating

Dissolve copper sulphate in water. Place the object to be plated as the cathode (negative) and a carbon rod as the anode (positive). Apply 3–6 V. A brilliant rose-gold copper coating deposits on the object. The same principle is used industrially for gold, silver, and nickel plating.

CHAPTER 18

Magnetic Effects of Electricity

The discovery that electricity produces a magnetic field — and vice versa — has led to every electric motor, generator, radio, television, MRI scanner, and thousands of other modern technologies. It is one of the most consequential discoveries in the history of science.

Wrap insulated copper wire around an iron nail and connect to a 1.5-V dry cell. The nail becomes a temporary magnet — attracting pins and paper clips, and releasing them instantly when the current is switched off. This is the fundamental principle of the electric bell, the telegraph, the motor, and the generator.

Safety Lesson: As a high-school student, I made the mistake of connecting my electromagnet coil directly to 220V mains. There was a spark, a loud sound, and the fuse blew. Never connect a coil (low resistance) directly to high-voltage mains. Always use the correct voltage and a fuse or current-limiting resistor.

CHAPTER 19

The Wonderful World of Electronics and the Battery Eliminator

Electronics begins where conventional electricity ends. While electricity deals with power, motors, and transformers, electronics deals with controlling electrons with precision — amplifying tiny signals, converting AC to DC, generating oscillations, and performing logical operations.

The key breakthrough was the discovery of semiconductors — materials that are neither conductors nor insulators, but can switch between these states under specific conditions. The semiconductor transistor, invented at Bell Laboratories (USA) in 1947, was the foundation of the modern electronics industry.

The Battery Eliminator

A battery eliminator converts 220V AC mains power into stable low-voltage DC — ideal for powering radios, small gadgets, and experimental circuits. It is the best introductory electronics project for any student.

It uses four key stages: a step-down transformer → a diode bridge rectifier → a smoothing capacitor → a voltage regulator. Building one teaches transformer action, rectification, filtering, and voltage regulation — covering a large portion of the electronics syllabus in a single practical project.

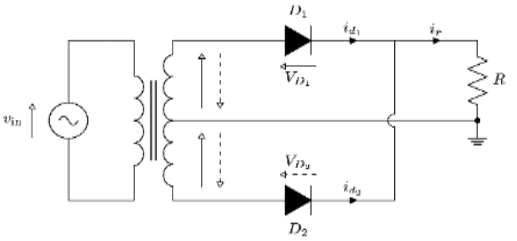

CHAPTER 20

A Radio Without Batteries

Can a radio truly work without any power source? Yes — if you live close to a strong radio transmitter.

In 1982, while in Cuttack as a 2nd-year medical student, I read about this in a science magazine. I assembled one from just four components: a long wire antenna, one diode, one capacitor, and a sensitive earphone recovered from an old telephone.

When I connected them as per the circuit diagram and held the earphone to my ear — I could clearly hear All India Radio Cuttack. No battery. No power supply. The radio signal itself provided the tiny amount of power needed to drive the earphone. The crystal radio works by rectifying the high-frequency radio wave to produce an audio signal.

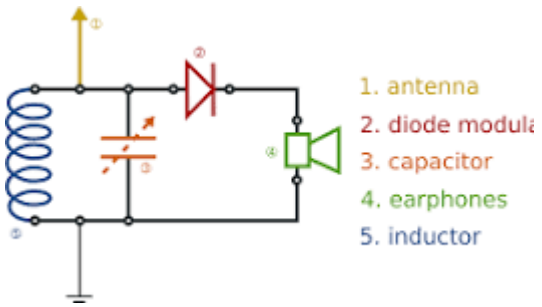

This is the simplest possible radio receiver and one of the most satisfying electronics projects. The antenna receives electromagnetic energy; the diode demodulates it; the earphone converts it to sound.

CHAPTER 21

A Simple Radio Transmitter — Your Own Radio Station

Transmit your voice or music to any AM radio within 100 metres — using just one transistor. Yes, it is that simple.

The circuit requires: one transistor, one diode, one AM antenna coil, one capacitor, one small speaker (used as a microphone), and a 9-volt battery. Connected as per a standard circuit diagram, the transistor oscillates at a radio frequency, which is modulated by the audio signal picked up by the speaker-microphone.

In 1983, I set this up in my hostel room at SCB Medical College. I could broadcast announcements, songs, and study discussions to all my friends' radios across the hostel. We had our own radio station — entirely built by a medical student.

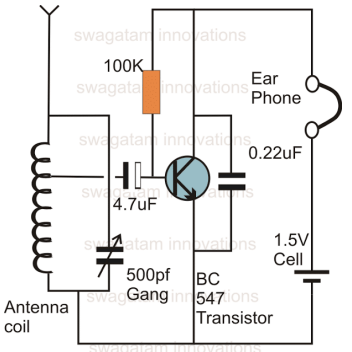

Note: Radio transmission requires a licence if your signal goes beyond your premises. Keep transmitter power very low for home or school use.



CHAPTER 22

Rewinding the Ignition Coil of a Scooter

This is perhaps the most satisfying story in this book — a demonstration that understanding science at the +2 level can solve real problems and save significant money.

After a film, my Vespa scooter would not start. A mechanic diagnosed a failed ignition coil. No spare part was available in Bhubaneswar; it would take two weeks to obtain from Hyderabad and cost ₹1,200 (from a scooter that cost ₹8,000 — a serious expense).

I examined the coil carefully. It was simply a spool of fine enamelled copper wire on a plastic case. I reasoned: if the original wire had broken or burned, I could simply rewind it with fresh wire of the same gauge and weight, producing the same number of turns and therefore the same inductance.

I bought the exact gauge of enamelled copper wire from a shop in Bapujinagar. I carefully removed and weighed the original winding, matched it exactly, and hand-wound the new coil over one hour — with consistent, even, compact turns. I soldered the ends, sealed the case with wax. Total cost: approximately ₹50.

I told the mechanic I had obtained the coil from Hyderabad. He was baffled by the speed. The scooter started on the very first kick.

All science students can do wonders when they have genuinely understood the concepts — not just studied for marks.

CHAPTER 23

Lighting a 12-Volt Bulb with 220 Volts — and Reviving a Fused Bulb

Posted to an Army camp near Amritsar in December 1990, all the tent bulbs fused simultaneously during a high-voltage surge. No replacement bulbs. No shops nearby. Only 12-volt vehicle headlight bulbs were available.

A 12V, 60W bulb draws 5 amperes. To use it on 220V without burning it, it needs a series resistance. A 1,500-watt electric heater draws about the same current (approximately 6.8 A). I connected the 12V bulb in series with the heater coil — and it glowed beautifully, providing light for both myself and the Commanding Officer.

Reviving a Fused Incandescent Bulb

A fused filament bulb can often be given several more months of life by carefully tilting and rotating the bulb until the two separated ends of the broken filament coil touch. The heat generated at the junction causes the ends to fuse together. I have done this many times successfully — saving money and resources.

CHAPTER 24

Getting Electricity When the Power Fails

A domestic electricity supply has three lines: live, neutral, and earth (earthing). When a power failure is caused not by a true cut but by a break in the neutral line only, a simple and safe trick can restore a working supply: connect the neutral terminal of your circuit to the earthing wire.

Earthing is connected to a buried metal rod and therefore at approximately the same potential as the neutral, just with slightly more resistance. The voltage will be a little lower, but sufficient for light loads.

While my entire colony was in darkness, I had light — simply by thinking beyond the obvious. This is out-of-the-box thinking at its most practical.

This technique should only be attempted by someone with basic electrical knowledge and proper insulated tools. Never work on live circuits without switching off the main breaker first.

CHAPTER 25

Repairing a TV at Zero Cost

Our family's first portable black-and-white television stopped working unexpectedly. The nearest repair shop was far away. I decided to investigate myself.

Opening the back cover, I traced the power supply circuit and found a blown fuse. I replaced it with the spare fuse that was attached to the inside of the case. The television came back to life immediately.

Before taking any electrical appliance to a repair shop, always check: the fuse, the power cable, and any visible loose or broken wires. This can save you time, money, and effort. The most common fault in many appliances is the simplest one.

CHAPTER 26

Tube Light Without a Choke — My Innovation

A 40-watt fluorescent tube light provides more light than a 100-watt incandescent bulb, with glare-free, natural-looking illumination — ideal for reading and work. But the ballast choke was expensive.

A choke is an inductor (a coil) that limits AC current. I reasoned: a simple resistor (such as a light bulb) also limits current and works equally well in both AC and DC circuits. A choke offers no resistance to DC, but a resistor does — so a resistor is actually more versatile.

I replaced the ₹100 choke with a ₹10 incandescent bulb connected in series with the tube. The tube lit up perfectly. The bulb also glowed dimly — providing a little extra light. A saving of ₹90, which was significant in those days.

CHAPTER 27

The Colourful World of Indicators

Some chemicals change colour dramatically depending on the pH of their environment — we call these indicators.

- Turmeric: yellow in neutral or acidic medium → orange-red in alkaline medium
- Litmus (from seaweed): red in acid → blue in alkali
- Phenolphthalein: colourless in acid → pink/red in alkali
- Methyl orange: red in acid → yellow in alkali

The Colour-Changing Bottle Experiment

Dissolve a small amount of methylene blue in 200 ml of water. Add a pinch of glucose and a few drops of sodium hydroxide solution. Cap the bottle tightly. Shake vigorously — the blue colour disappears and the solution becomes colourless. Let it rest for a few minutes — the colour returns. Shake again — it disappears again.

This is the 'blue bottle experiment' — a beautifully simple demonstration of oxidation-reduction (redox) reactions driven by dissolved oxygen.

Photosensitive Colours

Silver bromide (AgBr) is decomposed by light into silver metal and bromine, producing a dark colour from a colourless compound. This is the basis of traditional photography — and of photochromic (light-sensitive) sunglasses.

CHAPTER 28

Power from the Sun

Albert Einstein explained the photoelectric effect in 1905 (Nobel Prize in 1921) — demonstrating that light can eject electrons from a surface. The first silicon photovoltaic cell was demonstrated at Bell Laboratories, USA, in 1954 — just seven years after the transistor was invented there.

Getting electricity from sunlight is, in a sense, miraculous: no moving parts, no chemical consumption, no fuel cost, minimal maintenance. Efficiencies of 15–30% are achievable today with commercial panels, and the cost has fallen by over 90% in the last two decades.

One square metre of sunlight delivers approximately 1,000 watts of power. A 20%-efficient solar panel produces 200 watts from that — clean, silent, and free.

CHAPTER 29

My First Amazement by Solar Energy — Doctor Challenges Engineer

After leaving the Army in 1992, I purchased two acres of barren land at Chandaka, on the outskirts of Bhubaneswar. There was no electricity, no water — just land and a mission: total independence.

The only source of solar panels at the time was OREDA (Odisha Renewable Energy Development Agency). The last available set — 12 panels of 30W each, totalling 360W at approximately 17.5V and 1.8A peak current — was bundled with a pump rated for wells no deeper than 10 feet. My well was 30 feet deep.

The engineer refused to sell the panels to me, insisting they would be useless. The pump, which came along with the panels, could only lift water from a depth of 10 feet. I had researched and found a pump — the Tulu 80, manufactured in Varanasi — that could run on 180–240V DC or AC and lift water from up to 80 feet, requiring only 1.2A at 200V.

With all 12 panels in series, my system would deliver 210V at up to 1.8A — sufficient to power the Tulu 80 with a good margin. After some negotiation, the engineer approved the sale. The pump worked flawlessly, lifting water from 30 feet.

With surplus solar power available for most of the day, and no inverter yet available commercially in India, I assembled my own inverter from a circuit diagram and hand-wound a transformer of over one kilogram. I also made my own lead-acid battery from scratch. I had full electricity independence — produced entirely from sunlight.

CHAPTER 30

Free Light and Electricity — Saving Money with Solar Energy

A solar panel on the rooftop costs very little today — and lasts more than 25 years. Paired with an LED light (long life, very low power consumption), it provides free indoor light indefinitely. Adding a small lead-acid battery (inexpensive) extends this to night-time use as well.

A rooftop solar panel also provides a continuous DC supply for charging vehicle batteries, (not electric vehicles, they need much higher voltage and current). Even in all petrol or diesel vehicles, there is a battery, both 2-wheelers and 4-wheelers. Many batteries deteriorate early simply from infrequent use and insufficient charging. A small solar trickle-charger connected permanently, to be detached only when going outdoors, can extend battery life from 2 years to 5 years or more, saving thousands of rupees. As lead acid batteries once damaged by keeping it in discharged state, it is irreversible and battery becomes dead in 3 months. Of course, the good news is all the lead acid batteries are going to be replaced by Li-ion batteries (though costly), requiring lesser maintenance but may take years, or may be sodium ion batteries take the place.

CHAPTER 31

Making My Own Lead-Acid Battery and Inverter (1992)

In 1992, inverters were not commercially available in India — only the concept and circuit diagrams existed. An inverter converts low-voltage 12V DC (from a lead-acid battery) to 220V AC, powering all domestic appliances. It had enormous advantages over a petrol generator: silent, zero emissions, no fuel cost.

The most challenging part was winding the transformer by hand — hundreds of turns of enamelled copper wire around a laminated iron core, all done manually. It was a tedious process, but I succeeded.

Making the battery involved casting lead grids, filling them with lead oxide paste, and forming them through repeated charge-discharge cycles. The positive plate becomes lead dioxide (PbO_2); the negative, spongy lead.

With functioning solar panels, a hand-made battery, and a hand-assembled inverter, I had achieved **complete electricity independence** in 1992 — entirely through applied science.

CHAPTER 32

Biogas — Power from Waste, Your Own Gas Station

Biogas is produced by the anaerobic decomposition of biodegradable waste — kitchen scraps, garden waste, animal dung, and human sewage. The main product is methane, which burns cleanly with a blue flame.

With 3 cows, 3 calves, and abundant kitchen and garden waste, I filled a 3-cubic-metre biogas plant provided under a Government of India subsidy scheme in 1992. After approximately 15 days, gas began flowing — eventually more than enough to cook for a family of six, with surplus for lighting.

Biogas slurry — the spent material from the plant — is one of the finest organic fertilisers available, richer in nutrients than raw manure and immediately plant-available.

Biogas from waste is entirely free, sustainable, and environment-friendly. By capturing methane that would otherwise enter the atmosphere as a greenhouse gas, you are simultaneously reducing global warming.

CHAPTER 33
Gases in Chemistry

Understanding how to produce, collect, and identify common gases is a core practical skill in chemistry.

Hydrogen

- Action of dilute sulphuric acid on zinc: $Zn + H_2SO_4 \rightarrow ZnSO_4 + H_2\uparrow$
- Action of sodium hydroxide on aluminium: $2Al + 2NaOH + 2H_2O \rightarrow 2NaAlO_2 + 3H_2\uparrow$ (brisk, commercial method used by balloon sellers)
- Electrolysis of dilute acidified water (produced at the cathode)
- Test: hydrogen burns with a clean 'pop' when a lit match is brought near

Oxygen

- Heating $KClO_3$ with MnO_2 as catalyst: $2KClO_3 \rightarrow 2KCl + 3O_2\uparrow$
- Electrolysis of water (produced at the anode, in half the volume of hydrogen)
- Test: relights a glowing splint

Ammonia

- Heating NH_4Cl with CaO (quicklime): $2NH_4Cl + CaO \rightarrow CaCl_2 + H_2O + 2NH_3\uparrow$
- Test: pungent smell; turns moist red litmus paper blue; produces white fumes with HCl

Chlorine

- Action of concentrated HCl on $KMnO_4$ or MnO_2: produces light yellow-green gas
- Test: bleaches moist litmus paper; has a characteristic sharp smell

Carbon Dioxide

- Action of any dilute acid on a carbonate or bicarbonate: $CaCO_3 + 2HCl \rightarrow CaCl_2 + H_2O + CO_2\uparrow$
- Test: turns lime water milky



CHAPTER 34

Magnesium from Sea Water

Magnesium is present in sea water at approximately 1.26% — far more abundant than in most land-based minerals. It is biologically important (present in chlorophyll and many enzymes) and industrially valuable (its alloy with aluminium — duralumin — is the structural material of aircraft).

The Experiment

Prepare a 10% solution of common salt in water (simulating sea water). Prepare a clear saturated solution of calcium hydroxide (slaked lime) in water. Add the calcium hydroxide solution to the salt solution. A white cloudiness immediately appears — this is magnesium hydroxide precipitating, because it is insoluble in water.

$$MgCl_2 + Ca(OH)_2 \rightarrow Mg(OH)_2\downarrow + CaCl_2$$

Filter off the magnesium hydroxide. Treat with hydrochloric acid to produce magnesium chloride solution. Concentrate and electrolyse to obtain pure magnesium metal.

The country that develops the cheapest method of extracting lithium, magnesium, or other battery metals from sea water will have an enormous economic and strategic advantage.

CHAPTER 35

My Wonder Room at SCB Medical College, 1983

Visitors to my hostel room at SCB Medical College, Cuttack, often stopped in astonishment. It was more laboratory than living room.

- A light-activated alarm triggered by early-morning light
- An intercom with the neighbouring room — built before intercoms were commercially available
- A 200-metre-range radio transmitter broadcasting music, jokes, and study topics across the hostel
- Voice amplifiers loud enough for the whole floor to hear
- Fermentation experiments — bottles with glucose and yeast bubbling quietly on the shelf
- Lead-acid batteries under charge for power backup
- A tube light running without a choke
- A simple electric heater made from a nichrome coil directly wired to the mains with a switch

The flow state — when work becomes so engrossing that you lose all sense of time — is the most creative human state. First described by Mihaly Csikszentmihalyi, it is characterised by deep focus, effortless performance, and intrinsic reward. It is the ideal state for invention and innovation. Deep interest, clear goals, and minimal interruptions are its prerequisites.

CHAPTER 36

Chloroform, Fermentation, and Electronics Projects

(These experiments must be conducted under the supervision of a teacher or adult.)

Fermentation of Glucose

Dissolve glucose or sucrose in water (less than 10% concentration). Add baker's yeast. Seal the container but allow gas to escape through a small vent. Keep at room temperature. In 24–48 hours, the solution becomes slightly alcoholic as yeast converts sugars to ethanol and CO_2. Filter and distil to obtain ethyl alcohol.

$C_6H_{12}O_6 \rightarrow 2C_2H_5OH + 2CO_2$ (yeast, anaerobic)

Light and Sound-Activated Burglar Alarm

Using light-dependent resistors (LDRs) or a small microphone, simple transistor circuits can switch a relay when light is interrupted or a sound is detected. This activates a buzzer or alarm. Many ready-made circuit kits are available, making this an ideal school project.

Being able to solder, read resistor colour codes, and use a multimeter or multitester will open a world of practical electronics. Most appliance failures are due to lose wires or a broken solder joint — simple to fix if you know how.

CHAPTER 37

Disappearing Frog and Flesh-Eating Chemicals

Strong alkalis (concentrated potassium hydroxide) and strong acids, particularly concentrated nitric acid, can dissolve organic matter entirely. After completing a biology practical dissection, I disposed of the frog by placing it in a hot concentrated KOH solution. Within hours, only the skeleton remained. I then added concentrated nitric acid — bones (calcium phosphate) dissolved completely.

$$Ca_3(PO_4)_2 + 6HNO_3 \rightarrow 3Ca(NO_3)_2 + 2H_3PO_4$$

This process — alkaline hydrolysis followed by acid dissolution — is the basis of alkaline hydrolysis cremation (liquid cremation), now used in several countries as an environmentally friendly alternative to conventional cremation.

This process is entirely legal and well-documented scientifically. Its discussion here is for educational purposes only.

CHAPTER 38

The Beginning of the Digital Age — My First Computer, 1999

In 1999, I purchased my first computer with printer and internet connection for ₹1 lakh — equivalent to approximately 120 grams of gold at the time, or about ₹12 lakhs in today's value.

The internet in India was then available through Satyam Infoway via telephone dial-up. It was slow and costly, but it opened a window to the world's knowledge. Colour television was in early stages; CDs were not yet common; music was recorded on magnetic tape.

In just twenty-five years, the cascade of change has been breathtaking: tape → CD → DVD → pen drive → streaming. Landline → mobile phone → smartphone. Film photography → digital → computational photography. My generation witnessed the entire transition — from steam to jet, from radio to AI.

One branch of science gives birth to another: electricity → electronics → digital computing → artificial intelligence. Understanding each layer makes the next one easier to grasp.

CHAPTER 39

Using a Mobile Phone Before Mobile Service Was Available

Deployed as a gynaecology specialist in a remote posting with only a landline, I was often unreachable during emergencies when I stepped off campus. In 2001, I found a device in the market that connected wirelessly to a landline via an outdoor antenna.

I installed an antenna at 10 metres height. The handheld receiver — somewhat bulkier than today's phones, powered by NiMH batteries — worked like a portable phone with a 10-km range. It amazed everyone who saw it. Patients and staff could reach me anywhere on the campus or nearby areas.

Mobile services reached our area five years later. The delay was not due to the underlying science — radio waves are as old as Marconi in 1895 — but due to the enormous infrastructure of cellular towers, SIM identification systems, and software required.

CHAPTER 40

Saving Energy, Water, and Effort with Smart Switches

Light-dependent resistors (LDRs) have been available for over fifty years. A simple LDR circuit can automatically switch on streetlights at dusk and off at dawn — without any human intervention. I implemented this in my hostel room in 1984. It is astonishing that Indian street lighting systems still largely rely on manual switching.

Timer switches — now available as inexpensive WiFi-enabled smart plugs — can automatically switch heavy appliances (ACs, geysers, water pumps) on and off at set times, saving electricity and preventing overcharging of batteries.

Perhaps the most practical application: an automatic water pump controller using a float switch. The pump switches on when the tank level drops and switches off when it is full, preventing overflow (a daily occurrence in most Indian homes). The components cost less than ₹500 and installation takes under an hour — yet this is still not standard in Indian homes or buildings.

Dream Projects and Incomplete Ventures

1. The Jet Engine

The principle of a jet engine is elegant in its simplicity: compress incoming air, inject and ignite fuel, expand the hot gases through a turbine (which drives the compressor), then expel them through a nozzle, generating thrust as per Newton's Third Law.

The challenge is in the materials: turbine blades must withstand temperatures of up to 2,000°C while remaining hard, light, and durable. The student or engineer who discovers a new alloy or ceramic for this application will not only become wealthy — they will make India self-reliant in jet engine manufacture, removing a critical strategic dependency.

Despite all the difficulties, I dared to build one at the young age of 16, I thought I will make the model as it so simple, it may not last long or efficient but will work and I can demonstrate it proudly, that was enough drive to start the project, I collected the rotor pipe and a case in which it can rotate and scrape steel to make the rotor blades, but unfortunately could not find a proper welding machine and the project remained incomplete.

2. The New Electric Battery

The next breakthrough in battery technology will come from a student or young researcher, not necessarily from a large laboratory. Promising directions include:

- Sodium-ion batteries (sodium is abundant and cheap)
- Magnesium-ion batteries (valency 2 → double the charge capacity)
- Aluminium-ion batteries (valency 3 → triple the theoretical capacity)

- Graphene supercapacitors (charge in minutes; last millions of cycles)

I imagined a battery I invented that is cheap and rechargeable, replacing the existing batteries on the market sold under my brand name. I did a lot of experiments, including using various iron salts, magnesium metal, silver, etc. Maybe if I were given proper lab facilities, I would have invented either a sodium-ion battery or a fuel cell using hydrogen and air.

3. Soda Ash by the Leblanc Process

Nicholas Leblanc (1742–1806), a French surgeon-chemist, invented the first industrial process for producing sodium carbonate in 1790. His contribution was enormous — soda ash was essential for glass, soap, and paper manufacture. He earned recognition but died in poverty. His story is a reminder that inventors deserve protection, recognition, and reward.

This was easy for me and the raw materials were also readily available in the market. I prepared the furnace using bricks and mud, enough to produce about up to 100kgs of soda ash every day. But I could not materialise it due to my admission to medical college for MBBS study at Cuttack in 1980. Again, as a young boy, I thought marketing could also be a problem, and there are plenty of negative people in India to pull the legs.

4. Project Total Freedom

Total independence — producing electricity, water, food, gas, and clothing entirely from one hectare of land — using solar energy, biogas, organic farming, and a small dairy. I achieved this at Chandaka, Bhubaneswar, in 1992. The project was ended by an armed robbery in my absence — a failure of security, not of science.

The vision remains valid: any family with modest land can achieve 90% independence from external supply, with significant savings, better health, and genuine freedom.

5. IIA3MS (Institute of integrated, alternative, allied & advanced medical sciences)

I started this institute in 1999 at Bhubaneswar in a posh market area known as 'Market Building', in unit 1. The main aim was to integrate various therapies for the best benefit to the patient as well as providing a holistic health care with a preventive aspect integrated. This was inspired by my father, who was a research officer at CCRAS (Central Council for Ayurvedic Sciences). Many chronic, incurable, or difficult cases used to come to him, usually with a long history of treatment by modern medicine doctors. He had many instances of miraculous cure and recovery, even in cancer and paralysis patients. I always wondered as a doctor of modern medicine with a strong belief in scientific methods (as you see in this book), that something is lacking in our approach in treatment to chronic diseases. It's ok when emergency management or very critical cases or infections are treated with modern medicine, but chronic diseases like hypertension and diabetes are not very convincing. Modern medicine is praiseworthy for the success in the surgical field, which has now progressed up to laparoscopic, minimally invasive and robotic surgery. The basic problem that the disease burden of the society and loss of productivity due to illness has rather increased, with young people getting heart attacks and India becoming the diabetes capital of the world. The need for an institute emphasising preventive and promotive health care, along with a holistic and integrative approach, is yet to be fulfilled. Though I started such a mission, due to the heavy workload from my state government job, I could not do it and did not get any support. Additionally, the alternative therapies were not recognised at the government level.

CONCLUSION of my incomplete projects-

It is clear in India that there is no dearth of creative, imaginative and innovative minds. The environment here resists change, and it is too difficult for poor/middle-class people to achieve greatness or innovate. This is due to 1000 years of loss of independence and remaining in a survival mode. Let us change it now, and develop India at the speed of light (my next book)

‘Continuous effort, not strength or intelligence- is the key to unlocking your potential’ -Winston Churchill

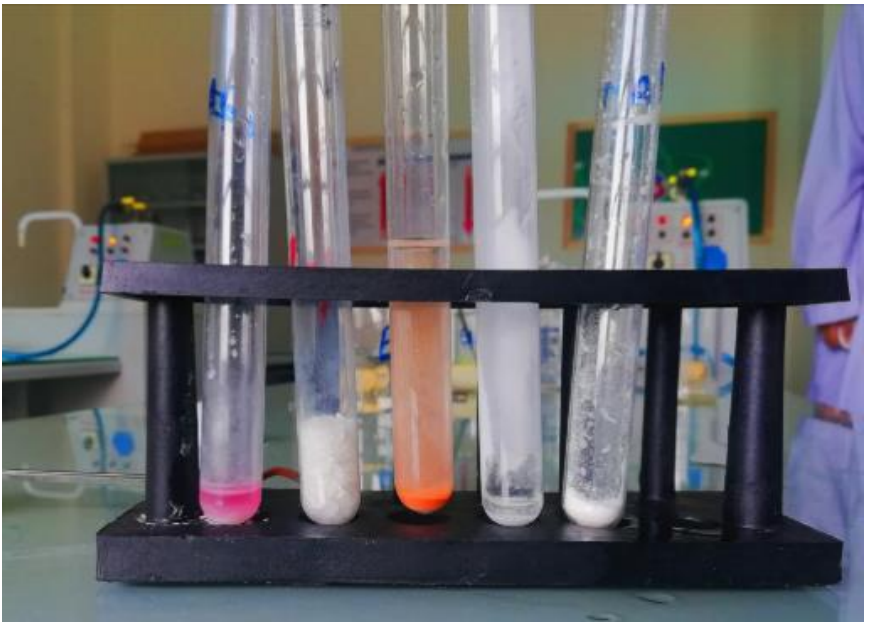

Bonus: Guidance for Students, Parents, and Curious Minds

Why and How to Study Science

Why Science Seems Difficult

The +2 Science syllabus is a compressed summary of three centuries of scientific discovery. Compressing Newton, Faraday, and Einstein into a few hundred pages is like summarising the Ramayana in three pages — the essence is lost. The solution is to go beyond the syllabus: read widely, watch good science documentaries, and most importantly, do experiments.

How to Study Science Effectively

1. Develop genuine curiosity — ask 'why' and 'how' constantly.
2. Understand concepts; do not memorise procedures without understanding.
3. Associate every concept with a real-world example or application.
4. Do as many experiments as possible — even simple ones.
5. Spend time thinking independently; reduce tuition dependency.
6. Use your subconscious mind — think about what you learned before sleeping.
7. Maintain a science notebook with your own observations, questions, and ideas.
8. Never compare your progress with others — compete only with yesterday's version of yourself.

For more details you can go through my book “why and how to study science”

Finding Meaning and Passion in Science

Human beings are more than survival machines. Our most distinctively human capacity is to choose a purpose — a reason to get up in the morning with a sparkle in the eyes.

Marie Curie devoted her entire life to science and received the Nobel Prize in both Physics and Chemistry — the only person ever to do so. She died from radiation exposure caused by her own research. She remains immortal in the history of science.

Science and technology provide limitless purpose. The number of unsolved problems is far greater than the number of solved ones.

What Is Serendipity?

Serendipity is an accidental discovery made by a prepared mind. Famous examples:

- Penicillin: Alexander Fleming noticed that mould contamination had killed bacteria around it — and investigated, rather than discarding the experiment.
- Teflon: Roy Plunkett was trying to develop a new refrigerant gas; the gas polymerised accidentally into a frictionless solid.
- Microwave oven: Percy Spencer, working with radar magnetrons, noticed a chocolate bar in his pocket had melted. He investigated and invented the microwave oven.

"Chance favours the prepared mind." — Louis Pasteur

How to Set Up Your Own Home Laboratory and its advantages

You do not need a dedicated room — a corner of any room, a garage shelf, or even a garden table will do. Two work surfaces are ideal: one for chemistry, one for physics and electronics.

For Chemistry

- Beakers, test tubes, a retort stand, a spirit lamp or small Bunsen burner
- Chemicals as per the list in Chapter 3

- Safety: always wear safety glasses; have a bucket of sand nearby; work in a ventilated area

For Electronics

- Soldering iron with flux and solder wire
- Nose plier and wire stripper/cutter
- Digital multimeter (measures voltage, current, and resistance)
- Breadboard for testing circuits without soldering
- Assorted resistors, capacitors, diodes, transistors, and LEDs
- A few hobby electronics project books

like a scientist, feel empowered and save money and time. Maybe you are interested your son or daughter instead of spending time in mobile phone or on screen you want they do something practical or hands on or you may be interested to show them something wonderful or let them catch the principles of some difficult science law or concepts.

You do not have to spend a fortune or have to make a lot of effort now a days to have your own, it is very easy due to online availability of many items. For more details you can refer to the chapter my collection of chemicals. Usually, all chemicals and apparatus are available in the scientific instrument store usually found near colleges or universities or in good market complexes. Only the sale of dangerous chemicals like concentrated sulphuric acid are restricted (which was not there earlier), for this you can take help of some senior or teacher. List of chemicals is too long, and you can get as per your wish. If you want to get the chemicals cheaper then you have to seek at other places like hardware store, chemist shop, Ayurvedic raw materials shop etc.

To setup your electronic workstation, you just need one soldering iron with soldering flux and solder wire. A nose plier and a wire cutter cum stripper. A good quality multimeter/multitester to measure the voltage, resistance and current (digital multimeters are easily and cheaply available now). A few more gadgets as per your interest. Get some hobby circuit books and electronic parts accordingly. Able do soldering is a basic skill in electronics along with motivated to work with these provided they get an opportunity. Practical learning automatically leads mastery in theory.

In every household there are items with loose wire or the solder broken, can be easily repaired here without the need for calling the electrician or taking it to repair shop. reading the colour code of resistances. All the young boys and girls will be highly interested

Story of famous scientist and inventor Thomas Alva Edison

As a very young boy, was given a letter by the school authorities to be handed over to his mother by him. It was written in the letter- 'your child is very poor in learning, we cannot allow him to study with other students, please arrange his education somewhere else'.

When the boy asked his mother what is written in the letter, she says you are a genius child, unfit to study with ordinary students. Then she started his learning at home only- home schooling- a concept getting popular now, where he was free to play and experiment, that made him such a great scientist.

His famous quotes-

After failing 1000 times in making an electric bulb, he succeeded and never disappointed, says-

'I have found 1000 ways that do not work in making a bulb'.

'Success is 99% perspiration and 1% inspiration'

First-Mover Advantages in Science and Innovation

The Wright brothers flew first — and the USA leads global aviation. The internet began in the US military — and US companies (Amazon, Google, OpenAI) lead its applications. Sony understood the transistor's potential before US companies did — and dominated consumer electronics for decades.

The lesson: whoever goes first in any significant area of science captures the majority of its benefits. Experiment, discover, patent, and then keep improving.

Alfred Nobel did not invent nitro-glycerine — but he innovated by mixing it with kieselguhr to make stable, handleable dynamite. He patented it, earned a fortune, and from its income created the Nobel Prize — the most respected award in human civilisation.

False obituary of Alfred Nobel

This is something which every sensible person on earth should think and work on it.

It is ok to live a good life, take care of the family and society, but can you just live a good life and die? Do you want to be remembered as a person who has contributed something for the mankind and planet. Of course, ever nobody except a few will want to leave this earth with a bad name. Alfred Nobel earned a lot of money but some bad name as dynamite was used in explosives and weapons for mass killings along with its good uses in mining and construction works.

In 1888, after French newspaper mistook the death of Alfred Nobel's brother, Ludvig, for his own, they published premature obituary of Alfred Nobel as "the Merchant of Death". The articles harshly criticized him for inventing dynamite and profiting from weapons.

This strongly brainstormed Nobel to do something great and to be remembered as a good person. He donated his wealth to the Nobel committee, and started Nobel prize, the best prize on this earth yet, a greatest wish for many which brings the highest respect.

Everybody should think as how he/she will be remembered after death, as all the wealth generated will stay here only, only thing which can be carried forward is the name, fame and good deeds (punya). Science offers such an opportunity for everybody.

Importance of imagination, innovation, and creativity, how to think like Elon Musk, Tesla, Thomas Alva Edison and Einstein or Bose. Right innovative and scientific mindset

These are the higher human abilities and the outputs of evolution of human brain, only possible on part of human beings. Even this is not possible by 99% people who simply live and die like any other animal, just taking care of their own family. Only a few people can create a history, and I wish you should be one of them. Every country wants such people in their country so that the country as whole grows and develops faster. Today's superiority is not in might of swords but in the cutting-edge technology with advanced science. But the big question is how to have such a mindset? Following are a few secrets and tips for that-

1. Think yourself as a unique and creative individual, made by God, every human being has some unique ability, God gifted and mastered.
2. Freedom from the basic survival and security needs, that is why students can be better in this as they do not have to think about their bread and butter, when countries have colonised and ruled by some foreign power as had happened for more than 1000 years in the history of India, the innovative and creative abilities of the society almost die due to survival mode or fight or flight mode, creating a different physiology altogether.
3. Believing that you can, and innovation and creativity are not the only abilities confined to some elite scientists, you can believe that you are born to innovate and do something great.
4. This shift in mindset is the greatest asset in your innovation and creativity. Innovation and creativity mindset- to be infused in young minds.
5. Working under pressure, deadlines, tension, and anxiety which is quite common in many students especially near exams switches off the mind from innovation and creativity.
6. Encouraging the curiosity and inquisitiveness in children enhances innovation and creativity.

7. Hands on work, experiments, involving in the process of learning, seeing manufacturing or of repair of science gadgets or engines, as can be seen in garages can inspire innovation.
8. Focus, concentration by deep interest and passion in science generated from childhood.
9. Practice of meditation, contemplation, imagination, visualisation and using the power of subconscious mind definitely helps.
10. An innovative and creative environment, having a science lab, visiting science museums and exhibitions as well as encouragement from parents, teachers and friends can surely help.

HOW SCIENCE AND TECHNOLOGY CAN MAKE YOU A MILLIONAIRE

With name, fame and dignity, create history.

In past 300 years in the history of mankind, it has been proven that the real wealth creation lies only in science and technology. Recent example is Elon Musk, top 10 billionaires or the richest persons on this earth are so because of this only, (in India of course big scams or big cheats have made some rich), commercial activities followed with real estate and other big manufacturing, stock market investments (like Warren Buffet) can make us rich but none is as rewarding as science and technology.

Science, technology along with commerce have proven to be the sure way to wealth creation and abundance

Advantages and disadvantages of science and how to use it.

Science is like the Alladin's lamp which on rubbing a demon use to appear and asked for what to do. We have to be very ethical with high moral values with humanity in our hearts in order to gain maximum from science, or else it can kill us like a demon. With the invention of atomic energy, a huge power has come human hands. It has got the potential to destroy the earth many times. Other technologies like genetic

engineering have a huge devastating potential, development of chemical, biological and cyber weapons are alarming. International regulating as well as state authorities and elite people should think seriously and with the build in humanity angle in human minds this devastating use of science and technology hardly will ever happen, but possibilities are there.

Important Inventions That Changed Civilisation

Five categories of invention have most profoundly shaped human history:

1. Energy

- Steam engine (Watt, 1769) — Industrial Revolution
- Electricity generation (Faraday, 1831)
- Internal combustion engine (Otto, 1876)
- Nuclear energy (1940s)
- Solar photovoltaics (Bell Labs, 1954)

2. Transport

- Wheel (before 3500 BC)
- Steam locomotive (1804)
- Automobile (Benz, 1885)
- Aeroplane (Wright brothers, 17 December 1903, USA)
- Jet engine (Whittle and von Ohain, independently, 1930s)
- Rocket engine (Goddard, 1926)

3. Communication

- Printing press (Gutenberg, 1440)
- Telegraph (Morse, 1830s)
- Radio (Marconi, 1895)
- Telephone (Bell, 1876)
- Internet (ARPANET, 1969)
- Smartphone (IBM Simon, 1992; iPhone, 2007)

4. Health

- Vaccines (Jenner, 1796)

- Anaesthesia (1840s)
- Germ theory (Pasteur and Koch, 1860s–1880s)
- Antibiotics — penicillin (Fleming, 1928)

5. Information

- Transistor (Bell Labs, 1947)
- Microprocessor (Intel 4004, 1971)
- Personal computer (1970s–80s)
- World Wide Web (Berners-Lee, 1991)
- Artificial intelligence (Turing, 1950s; deep learning, 2010s)

This is a small sample just to ignite the interest in you; you can refer to internet or AI for more details.

For a little more clarity, you can go through my book ‘A Brief History of Science and Technology.’

Beyond Science

Science is one of humanity's most powerful tools — but it does not explain everything, nor does it claim to. It excels at answering 'how' questions: how does the heart pump blood? how do nuclear reactors generate power? But the deepest 'why' questions — why is there something rather than nothing? what is the purpose of existence? what is consciousness? — require different tools.

What Science Has Not Yet Understood

- Consciousness — how subjective experience arises from physical brain activity
- Dark matter and dark energy — comprising ~95% of the universe's content
- Unification of forces — gravity remains unreconciled with quantum mechanics
- The origin of life — how non-living chemistry became self-replicating biology
- The nature of time — whether it is fundamental or emergent

These are within the domain of science — but unresolved. They await the researchers of your generation.

For a little more clarity of the inquisitive mind, please go through my book, ' Father India'

Science does not explain everything — and it never claimed to. It is exceptionally powerful for explaining how nature works, but it is not designed to answer all 'why' questions. Recognising these limits is not a weakness — it is intellectual honesty.

The Future of Science and Technology

The cascade of scientific development continues to accelerate. Developments in artificial intelligence, quantum computing, and biotechnology are converging in ways that will transform medicine, energy, transport, and education beyond anything our current imagination can fully grasp.

- Artificial intelligence will automate routine cognitive tasks — but creativity, innovation, and experimental science remain distinctly human.
- Quantum computing will solve problems currently beyond any conventional computer.
- Gene editing (CRISPR) will enable treatment of previously incurable diseases.
- Clean energy — solar, wind, fusion, and green hydrogen — will replace fossil fuels within this century.
- Space science will advance toward permanent human presence beyond Earth.
- Brain-computer interfaces will open entirely new channels of human communication and capability.

The student reading this book today will be at the forefront of these developments. Your generation will determine whether India leads or follows. The choice is yours.

Keep experimenting & innovating!

Make your country and family proud and rich!!

Conclusion

Like a time machine, this book has taken you on a journey from the 1960s to the present. It has shown you that practical science is not the exclusive domain of laboratories, scientists, or wealthy countries. It belongs to every curious mind — in every home, in every town, in every country.

If you are a student, these experiments will deepen your understanding, strengthen your memory, and give you a genuine edge in every examination you face. If you are a parent, I hope this book has shown you that your child's curiosity is a gift to be nurtured, not a distraction to be managed. If you are a teacher, I hope it has given you new ideas and new energy.

If even one reader of this book goes on to make an invention or innovation that improves life for others, that will be the greatest possible achievement for this humble effort.

Make your life worth remembering. You can join this journey — together, we can propel India and mankind toward a better future.

Please share your experiments, ideas, and innovations. If you would like to join the Young Scientists and Innovators Club, or help open a practical science and innovation centre in your area, write to the author.

Email: dashbachaspati@gmail.com
YouTube: @drbachaspatidash1512

Wish you all the best